USER MANUAL

USER MANUAL

READ ALL INSTRUCTIONS BEFORE OPERATING EQUIPMENT

Table of Contents

System Requirements	03	Maintenance	10
Installation	05	Troubleshooting	11
Operation	08	Appendices	
Cleaning	09	Parts Callouts	12

⚠ WARNING:

1. All personnel using this unit must be familiar with the information contained in this manual. Follow all installation and maintenance instructions.
2. Ensure solid footing and use both hands when operating the unit.
3. Avoid contact of chemicals with skin and eyes. If contact occurs, see SDS sheet for further first aid measures.
4. Follow safety instructions of chemical manufacturer (SDS).
5. Always follow plant and OSHA guidelines about the use of equipment.
6. Disconnect air before servicing equipment.
7. Always follow safety precautions and obey warning labels. Failure to do so could result in injury or death.

Overview

The footwear sanitizer is a compact, low cost way to quickly and efficiently apply sanitizer to the bottom of footwear in an easy to use, walk through model. Designed for dry facility environments, increases pathogen prevention while maintaining minimal moisture output.

Using only compressed air the applies 0.2 ounces of sanitizer to the bottom of each boot, simultaneously, via 8 misting nozzles (4 per boot). The misting output reduces over-spray while still providing adequate solution coverage to the entire sole, preventing cross contamination between high risk environments and control zones.

Specifications

- Construction: 304 Stainless Steel, HDPE Polypropylene, PVC, Viton (seals)
- Weight: 92 lbs. (41.73 kg.)
- Dimensions: 29.5" x 28" x 42"
  749.3 x 711.2 x 1,066.8 mm
- Solution consumption: 0.4/oz. per activation*
- Noise Level: Less than 70 dB(A)

**Dilution rates and flow rates given are based on chemical with viscosity of water and factory air pressure settings.*

Requirements

- Compressed Air: 60-80 PSI*
  1/4" OD quick connect fitting supplied with unit

⚠ CAUTION

*Air regulator not supplied with unit!

- Liquid Temperature Range: 40-100°F (4-37°C)
- Chemical compatibility: Chemical products used with this equipment must be formulated for this type of application and compatible with unit materials and plumbing seals.

NOTE: For more information on chemical compatibility, consult the manufacturer or SDS for your product or contact our support department.

Installation Requirements

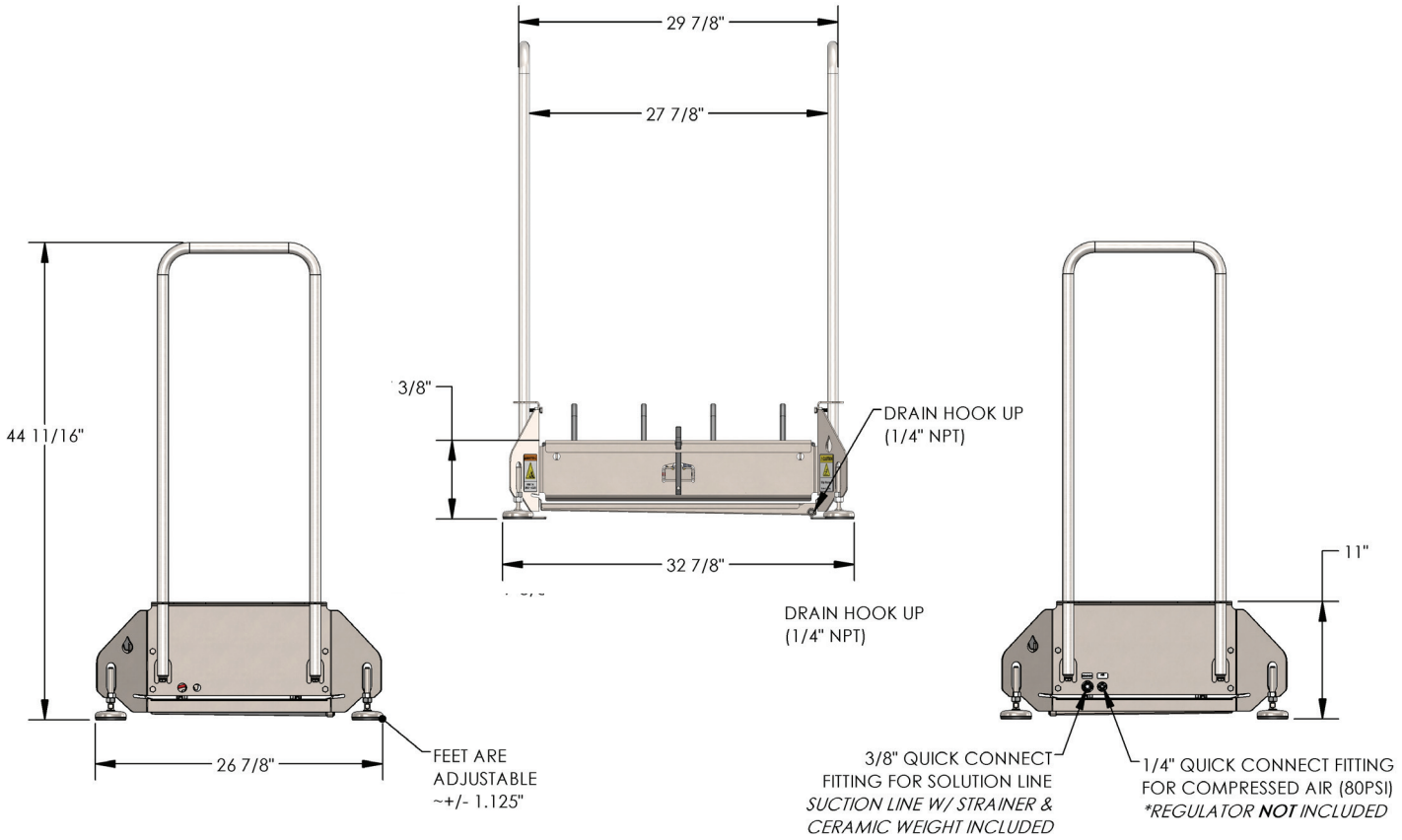

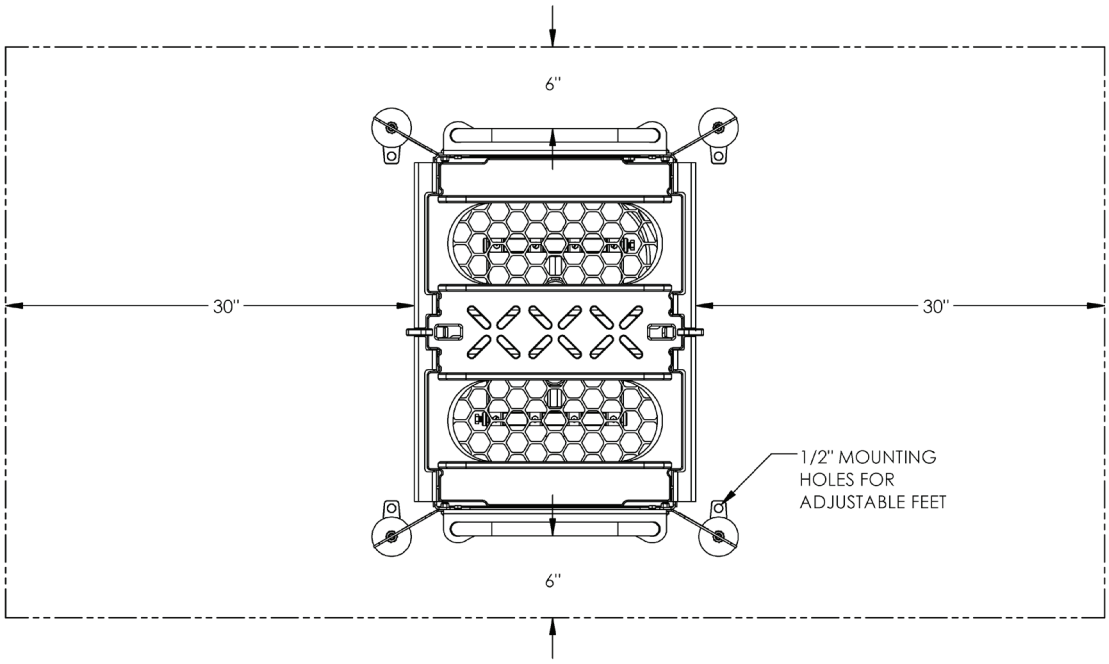

Installation

Installing Handrail

Due to the shipment size, the unit will arrive with the handrails disconnected.

1. Place handrails through the mounting holes on each side of the unit [Figure 5.1].
2. Using a 1/2" wrench or socket, secure the handrails in place using the included 5/8" length bolts, with lock washers, to the bottom bracket of the each handrail [Figure 5.2].
3. Using two 1/2” wrenches tighten the bolt through the locknut until the bolt bottoms out against the handrail to secure in place [Figure 5.2].
4. Repeat for opposing handrail (8 bolts total).

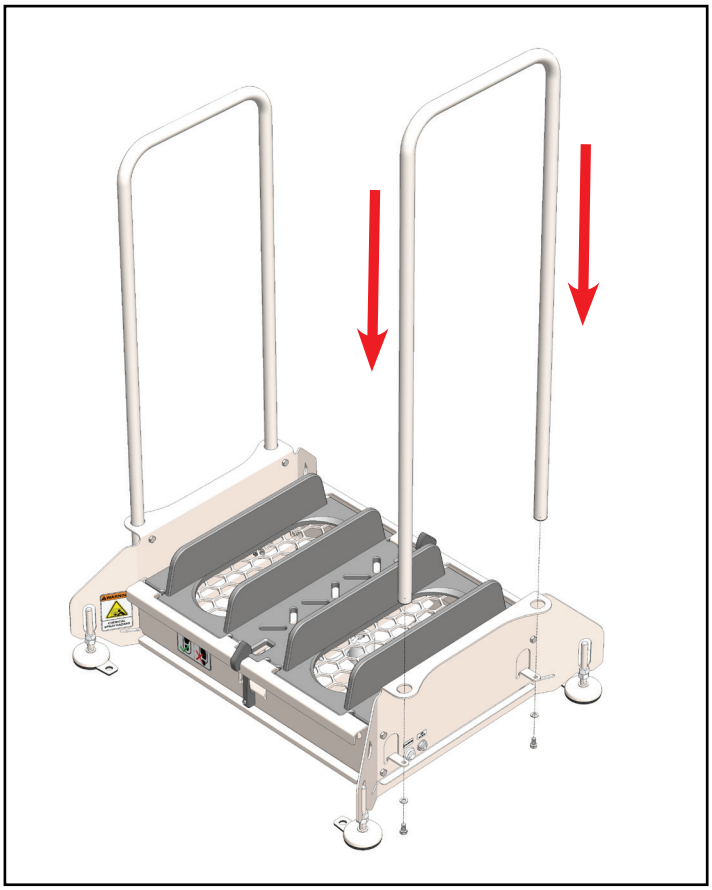

Fig. 5.1: Installing Handrail

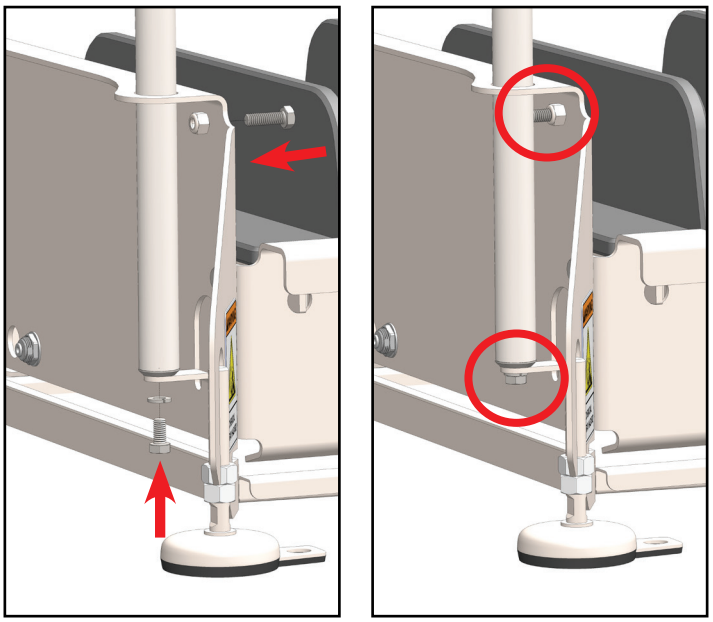

Fig. 5.2: Handrail stabilization bolts

Installation (continued)

Installing and Mounting the Unit

1. Set unit in desired location.
2. Aspects to consider when deciding on placement:
   - Clearance for entering and exiting.
   - Traffic flow for unit operation.
   - Emergency exit paths or egress in case of emergency.
   - Head room for personnel while using the unit.
   - Flat and/or level floor surface
3. Using a level and 3/4" wrench, stabilize the unit and level in all directions by adjusting the feet and lock nuts as necessary [Figure 6.1].
4. Using the 4 mounting brackets located at each corner, securely fasten the unit to the floor with appropriate hardware for the given material (i.e. concrete anchors, bolts, etc.) [Figure 6.2].

⚠ WARNING

If not properly secured to floor the unit may tip over and has the potential to cause personal injury.

5. Connect solution and air lines to the unit via the quick connect fitting on the side of the unit [Figure 6.3].
   - Solution: 3/8" OD quick connect fitting
   - Air: 1/4" OD connection quick connect fitting

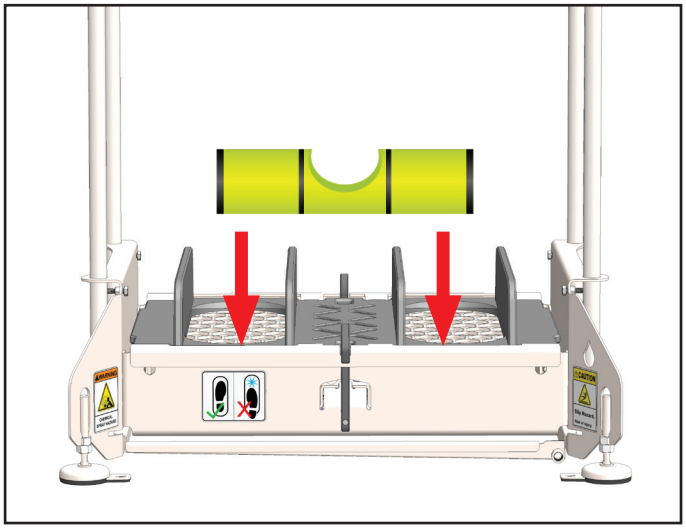

Fig. 6.1: Verify level of unit at each end

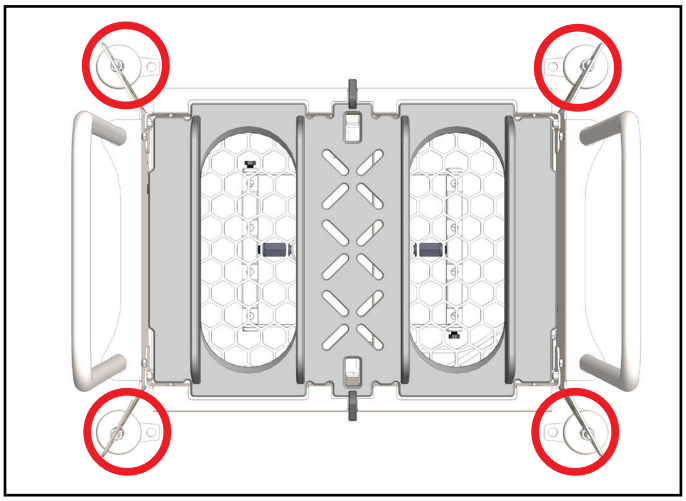

Fig. 6.2: Mounting bracket locations

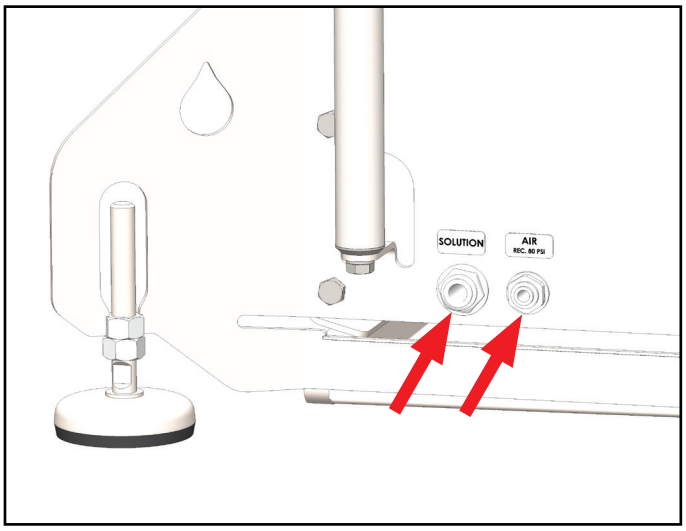

Fig. 6.3: Solution and air line quick fit connections

Installation (continued)

Installing & Removing Base Plate

1. To remove the base plate, pull back on the plastic latch to free the plate [Figure 7.1].
2. The base plate can be hinged open if desired as shown in [Figure 7.2].
3. Base plate can be removed entirely for COP processes or sprayed down in position.
4. To re-inset, orient as shown [Figure 7.1] and slide past plastic latches until locked into position.

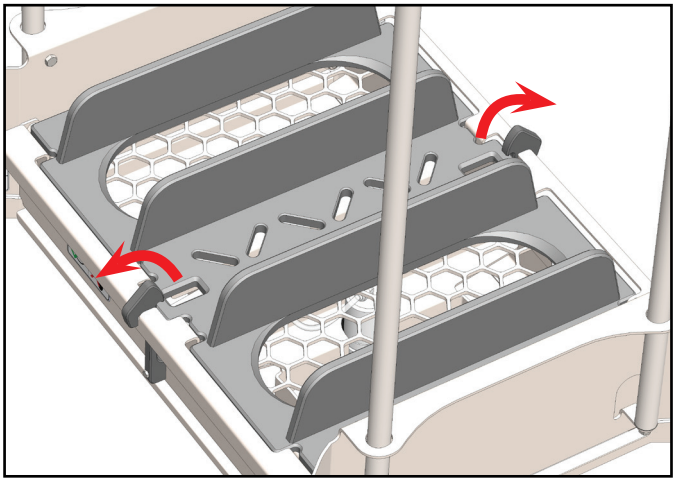

Fig. 7.1: Releasing foot plate latches

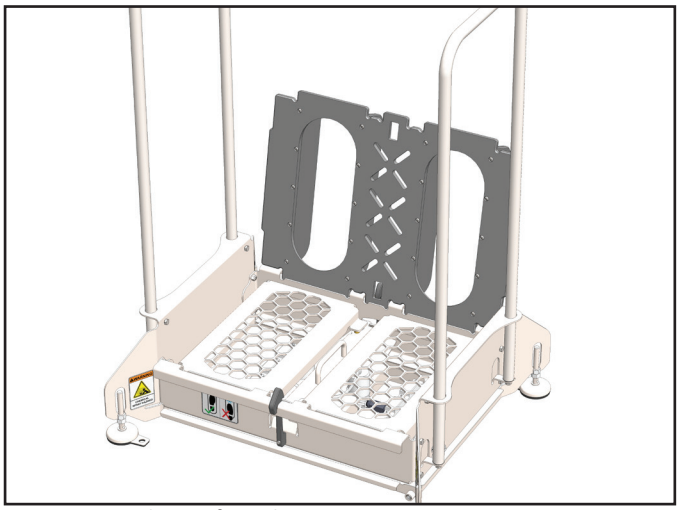

Fig. 7.2: Hinged open foot plate

Removing Plumbing Assembly

1. Hinge open or remove the base plate as previously described.
2. Hinge open each mesh plate.
3. Disconnect the air and solution lines from their quick connect bulk-head fittings.

> ⚠ **WARNING**
> Shut off air supply and exhaust air and solution lines prior to disconnecting.

4. Pull up on the handle to remove the entire plumbing assembly [Figure 7.3].

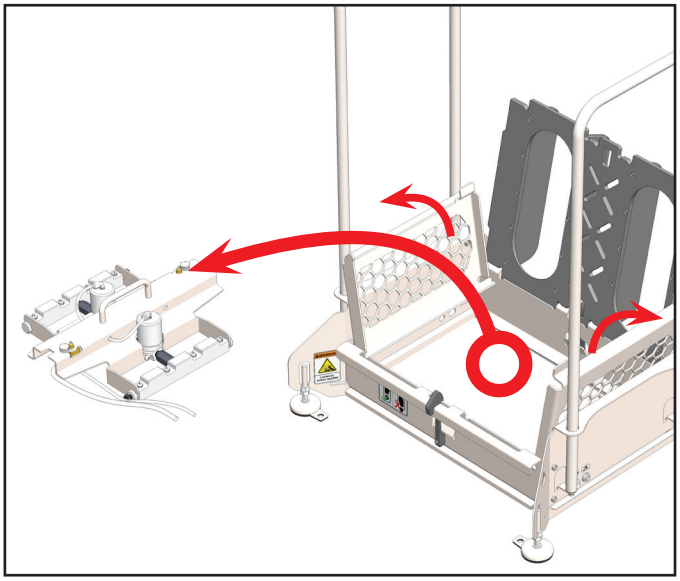

Fig. 7.3: Removing Plumbing Assembly

Operation

Priming

When first connected (either from initial set-up, after maintenance, or replacement of solution) the unit must be primed for proper activation to occur. Ensure handrails and base plate are secured and the system itself properly installed.

⚠ WARNING

This unit is for use with fully protective footwear only. Do not activate the unit if a user's feet are not positioned above nozzle system.

1. Enter the unit from either opening.
2. Step up onto the unit while gripping the handrails.
3. Position feet within base plate outlines, centering each foot above its nozzle system [Figure 8.1].

NOTE: Unit will not operate with only one foot in place. Both feet must be on the unit, in position, for sanitizer activation.

4. Step down, with both feet - the unit will activate as compressed air is engaged and the suction line will begin to draw solution.
5. Repeatedly lift one, or both feet, to cycle the unit multiple times until primed.
6. Once primed, the unit will mist solution evenly between both nozzle manifold assemblies and is ready for normal use.

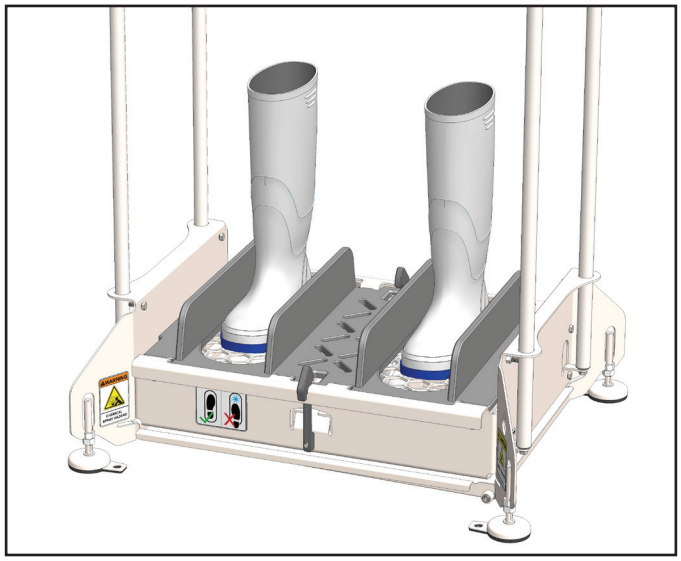

Fig. 8.1: Foot/Boot position for unit operation

⚠ CAUTION

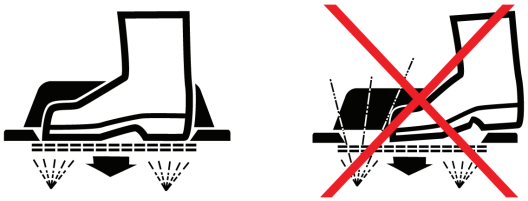

Ensure correct foot placement to prevent overspray!

Operation (continued)

General Use

Before operating the unit, ensure solid footing and use both hands on the handrails for support.

1. Enter the unit from either opening.
2. Step up onto the unit while gripping the handrails.
3. Position feet within base plate outlines, centering each foot above its nozzle system [Figure 9.1].
4. When both feet have stepped onto the base, the unit will activate.

> **NOTE:** Unit will not operate with only one foot in place. Both feet must be on the unit, in position, for sanitizer activation.

5. Step down to exit the unit.
6. System is immediately recharged upon exit and is ready for the next user.

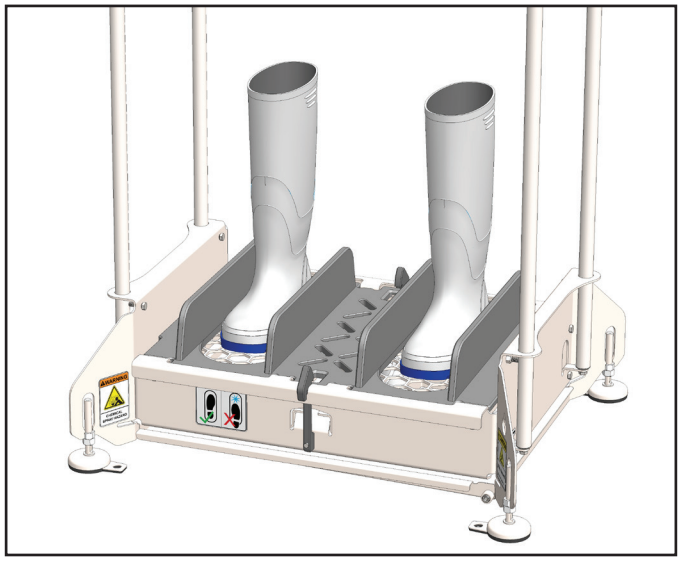

Fig. 9.1: Foot/Boot position for unit operation

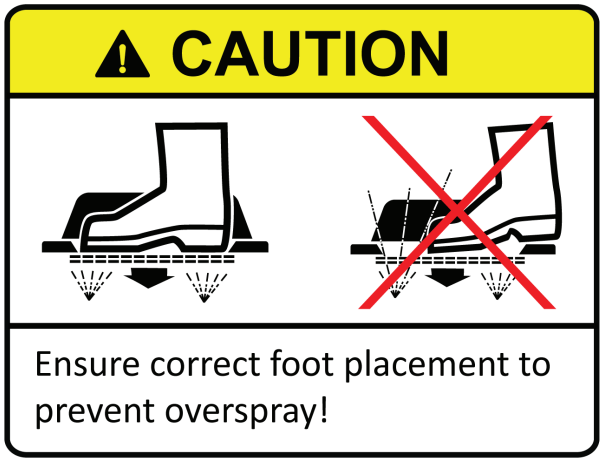

Cleaning and Wash-Down

1. Slide out catch pan from either opening to remove [Figure 9.2].
2. Empty/dispose of accumulated solution and/or debris as necessary.
3. Remove the base plate and plumbing assembly from the unit (if desired).
4. Base plate can be washed individually, in a COP tank, or wash machine.
5. The frame can be washed down by conventional means.

> **NOTE:** Consult materials of construction (page 2) for appropriate cleaning solution compatibility.

6. Replace plumbing assembly, catch pan, and base plate before resuming normal operation.

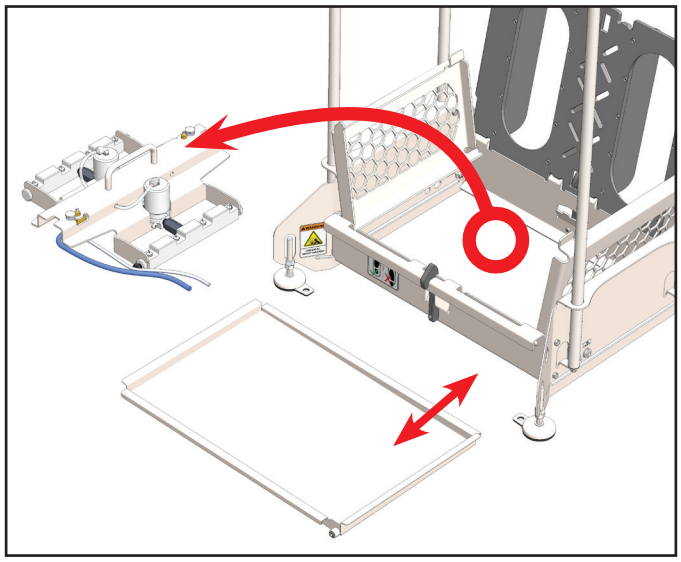

Fig. 9.2: Removing debris and plumbing assembly

Maintenance

The following maintenance procedures are recommended for normal use. Units which see a high amount of daily use should be inspected more frequently as necessary.

⚠ WARNING

Shut off air supply and exhaust air and solution lines prior to maintenance procedures. Always wear appropriate personal protective equipment (PPE) when operating or servicing unit.

Daily:

- Check catch pan for solution or debris accumulation and empty as necessary.
- Inspect plastic base plate and stainless steel mesh plates for soil or solution accumulation and clean as necessary.
- Check solution level to ensure unit remains primed.

Weekly:

- Inspect solution and air lines for leaks.
- Verify nozzles assembly is free of debris and/or clogs. Rinse with low pressure water to clean.
- Check solution line for debris build-up on strainer/filter (if used). Clean or replace as necessary.
- Ensure solid handrails and mounting to floor.

Monthly:

- Check all fasteners to ensure they are tight.
- Check misting nozzles for clogs or irregularities.
- Ensure warning labels and decals are present and in good condition.

Quarterly:

- Inspect structure for cracked welds or bent/damaged components.
- Check plumbing assembly for tight connections.
- Inspect plumbing fittings for cracked or damaged connections.

Troubleshooting

⚠ WARNING

Shut off air supply and exhaust air and solution lines prior to maintenance procedures. Always wear appropriate personal protective equipment (PPE) when operating or servicing unit.

Unit is not misting solution:

- Ensure solution container is full, connected to the unit, and primed (see instructions on page 8).
- Check facility compressed air supply and regulator settings (see system requirements on page 3).
- Verify plumbing assembly (inside base) is in position and connected to the interior bulk heads.
- Check plumbing components for damage or points of failure (i.e. valve stem, spring plunger, etc.)
- Ensure user is positioning feet on both mesh plates, at the same time (see operation instructions on page 9).

Unit is spraying irregularly:

- Check filter or strainer on suction line and/or spray nozzles for debris build-up - remove, clean, and replace as necessary.
- Verify facility compressed air supply and regulator settings (see system requirements on page 3).
- Ensure connection lines from plumbing assembly inside the unit are not kinked or pinched.

Spray nozzle is not misting, but shooting:

- Verify the pin-hook on the nozzle is not damaged and is positioned directly above spray hole.
- If necessary repair or replace the nozzle (see page 12-13 for manufacture part number).

Unit is not staying primed:

- Ensure solution container is full and connected to the unit.
- Verify air and solution lines are connected.
- Check air and solution lines for leaks or failing connection points.
- Remove plumbing assembly and check all connection points and fittings (replace and reconnect to bulk heads when complete).

More Information?

Please contact your equipment representative or manufacturer for further support.

Appendix A - Parts Callout

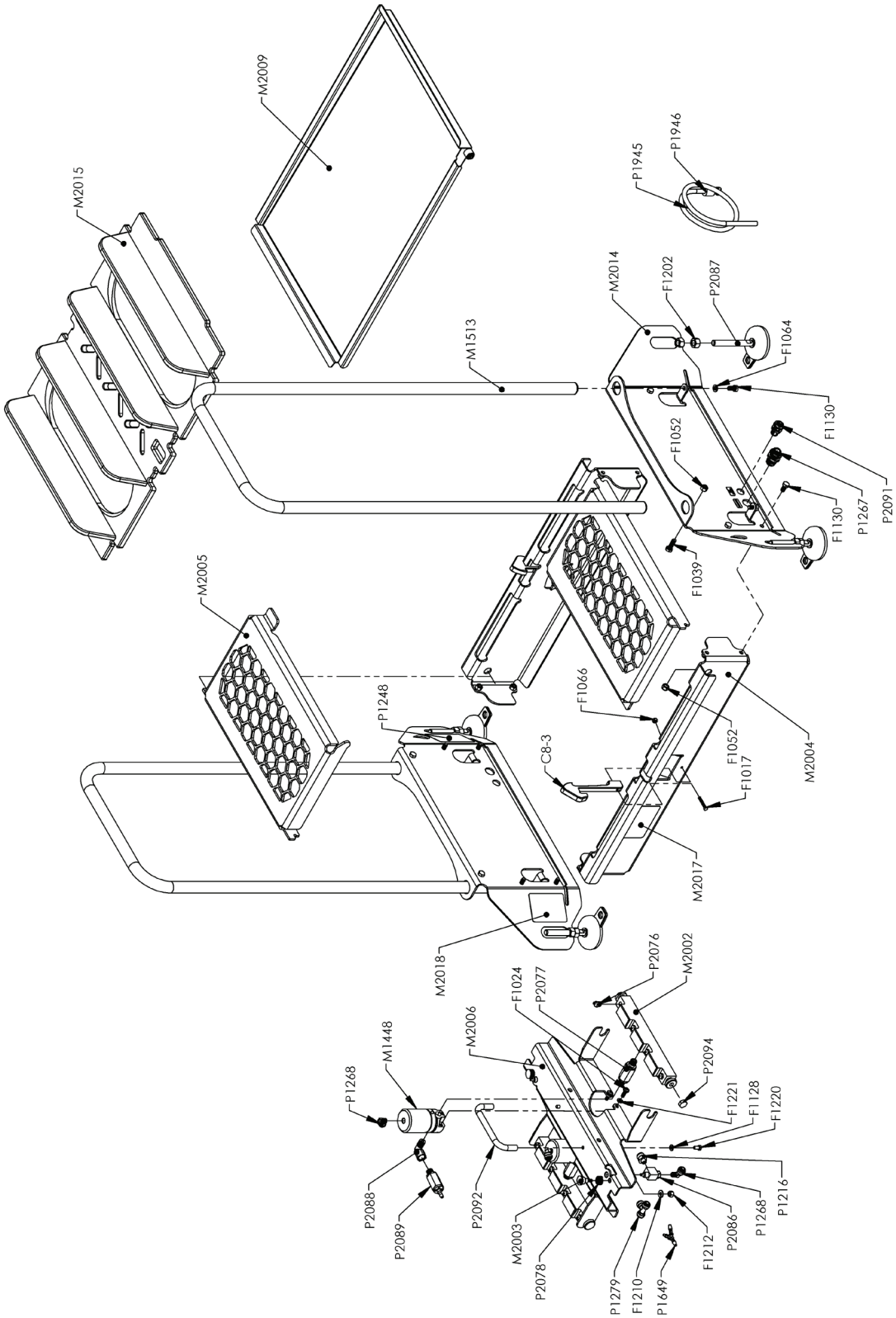

Appendix A - Parts Callout

Part No.	Description
C8-3	BLX-MR2 LATCH
F1017	BOLT HHC 10-32 X 1-1/4 SS
S142034	SCREW MACHINE 1/4-20 x 3/4 SS PHILLIPS
F1039	BOLT HHC 5/16-18 x 1 SS
LNSS516	NUT NYLOCK 5/16-18 SS
F1064	WASHER SPLIT LOCK 5/16 SS
LN1032	NUT NYLOCK 10-32 SS
F1128	WASHER SPLIT LOCK 1/4 SS
B5161858	BOLT HHC 5/16-18 X 5/8" SS
F1202	NUT HEX 1/2-13 316SS
F1210	WASHER FLAT 1/4 316SS
F1212	NUT NYLOCK 1/4-20 316SS
F1220	BOLT HHC M6 X 12 316SS
F1221	WASHER SPLIT LOCK 1/4 316SS
PSS02	SANITIZER DISCHARGE ASSEMBLY
FS-HNDL	HANDLE WELDMENT MBS-100 SINGLE
M2002	MANIFOLD 1/8" 4-PORT 10 x 1, 1/4" NPT INLET PP
M2003	BLX-MR2 SPRING PLUNGER
M2004	BLX-MR2 FRONT PLATE
M2005	BLX-MR2 GRATE PLATE V2
M2006	BLX-MR2 PUMP BRIDGE
M2009	BLX-MR2 CATCH PAN WELDMENT
M2014	BLX-MR2 SIDE PLATE WELDMENT
M2015	BLX-MR2 BASE LOCATOR PLATE ASSEMBLY
M2017	LABEL BLX-MR2 STEP INFOGRAPH
M2018	LABEL WARNING CHEMICAL SPRAY HAZARD
QF1814	QUICK FIT ADAPTER 1/8" NPT X 1/4" TUBE
P1248	LABEL SLIP HAZARD
P1252	PIPE PLUG 1/4" NPT SOCKET HD SS
QFBH38	QUICK FIT BULKHEAD 3/8"
QFEL1814	QUICK FIT ELBOW 1/8 NPT X 1/4" TUBE
H38CP	3/8" OD POLYETHYLENE TUBING - NATURAL (AVAILABLE PER FOOT)
QFT14	QUICK FIT TEE 1/4"
H14CP	1/4" OD POLYETHYLENE TUBING - NATURAL (AVAILABLE PER FOOT)
P1649	HOSE BARB WYR 1/4" POLY
P203CT-IH	1/4" ID (3/8'' OD) SUCTION LINE, STRAINER, AND WEIGHT
P2038	LABEL - MR2 QUICK FITTING
FCMN20	NOZZLE FOG .125 NPT 303 SS
CV14M	CHECK VALVE 1/4" BARB x 2-7/8"
P2078	SPRING 302 SS 0.72" OD 0.063" WIRE SIZE
SS1B2WV	VALVE STEM BRASS BODY
P2087	LEVELING FOOT .5-13 X 4 ANCHORING
EL14M14F	PIPE ELBOW STREET .25 PP
CV14M14B-R	CHECK VALVE 1/4" BARB x 2-7/8"
QFBH14	QUICK FIT BULKHEAD .25
P2092	HANDLE U SS TAPPED M6 HOLES
P2094	PIPE HEX PLUG 1/8 PP